7200GS

Sensorless Vector AC Inverter

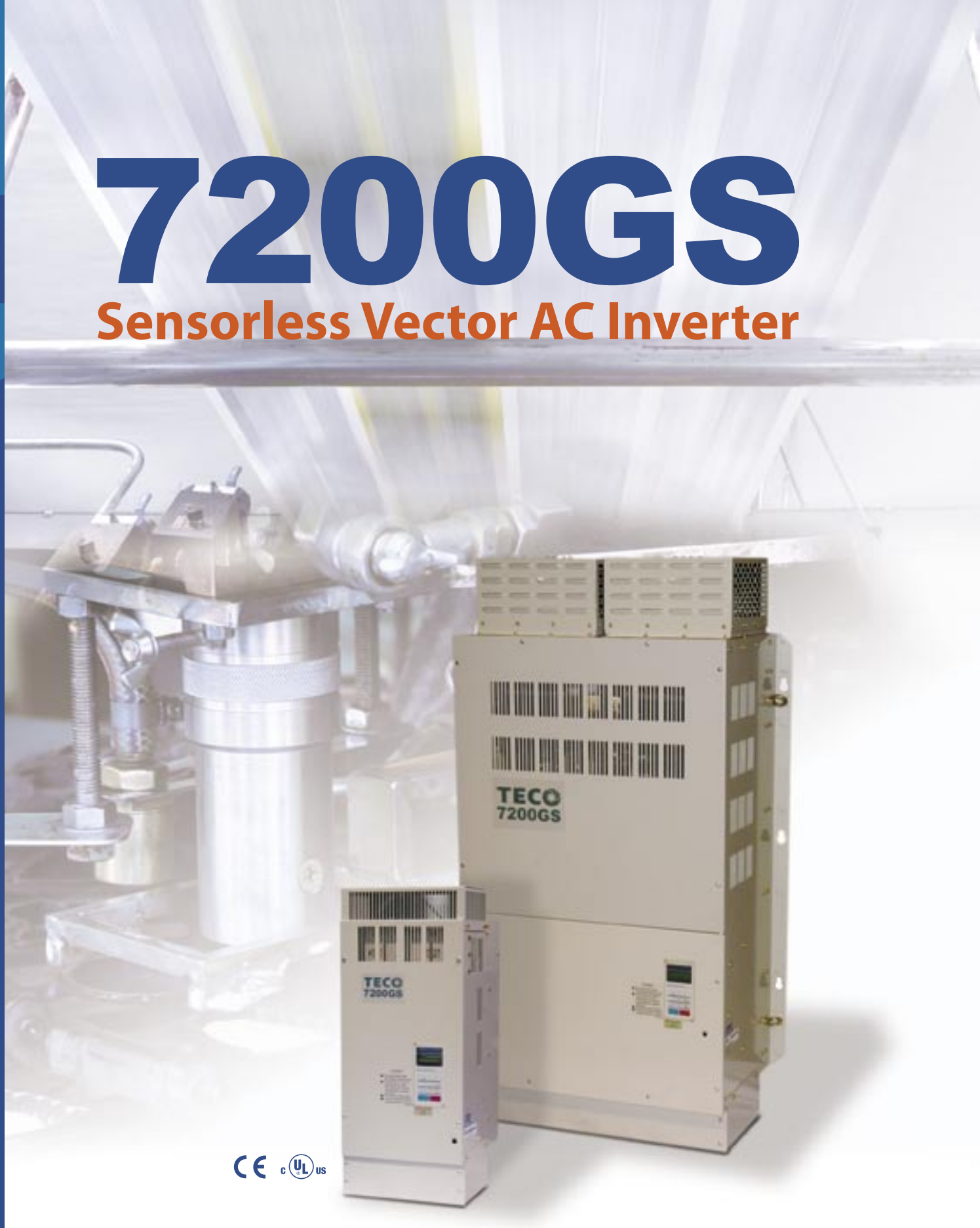

TECO Westinghouse

7200GS Features and Benefits

Plastics

- **High Starting Torque -** The 7200GS, when used in the Sensorless Vector Mode, can handle high starting torque at low speed and high impact loads with ease.

- **4-Control Modes to Fit Any Application**
  - **Sensorless Vector -** Vector speed control accuracy eliminates the need for an encoder. The 7200GS makes set-up easy with its built–in autotune software that senses the motor characteristics while it is running.
  - **PID Control -** Built-in process control system matches the measured process value (speed, pressure, flow rate, etc.) to the desired set-point value.
  - **V/Hz Control Mode -** General purpose for broad range of applications.
  - **V/HZ with PG Control -** +/- .03% speed control accuracy for precise speed applications.

- **English Language Operator –** Large, easy to read, LCD Display (2 rows x 20 characters) gives you the information you need to set-up, program, and monitor the inverter. The operator is also a copy unit for downloading parameters to another inverter.

- **Auto Energy Saving Software -** Automatically reduces the output power needed as the load decreases.

- **RS-485 Communications -** Modbus, Profibus

- **Global Standards -** CE c UL us

Aggregate

Custom Packages Available

The 7200GS can be supplied with a variety of options and your choice of NEMA enclosures. Quotations are available upon request.

NEMA 12 with Bypass

NEMA 3R

Custom NEMA 12

Connection Diagram

(460V 25 HP Example)

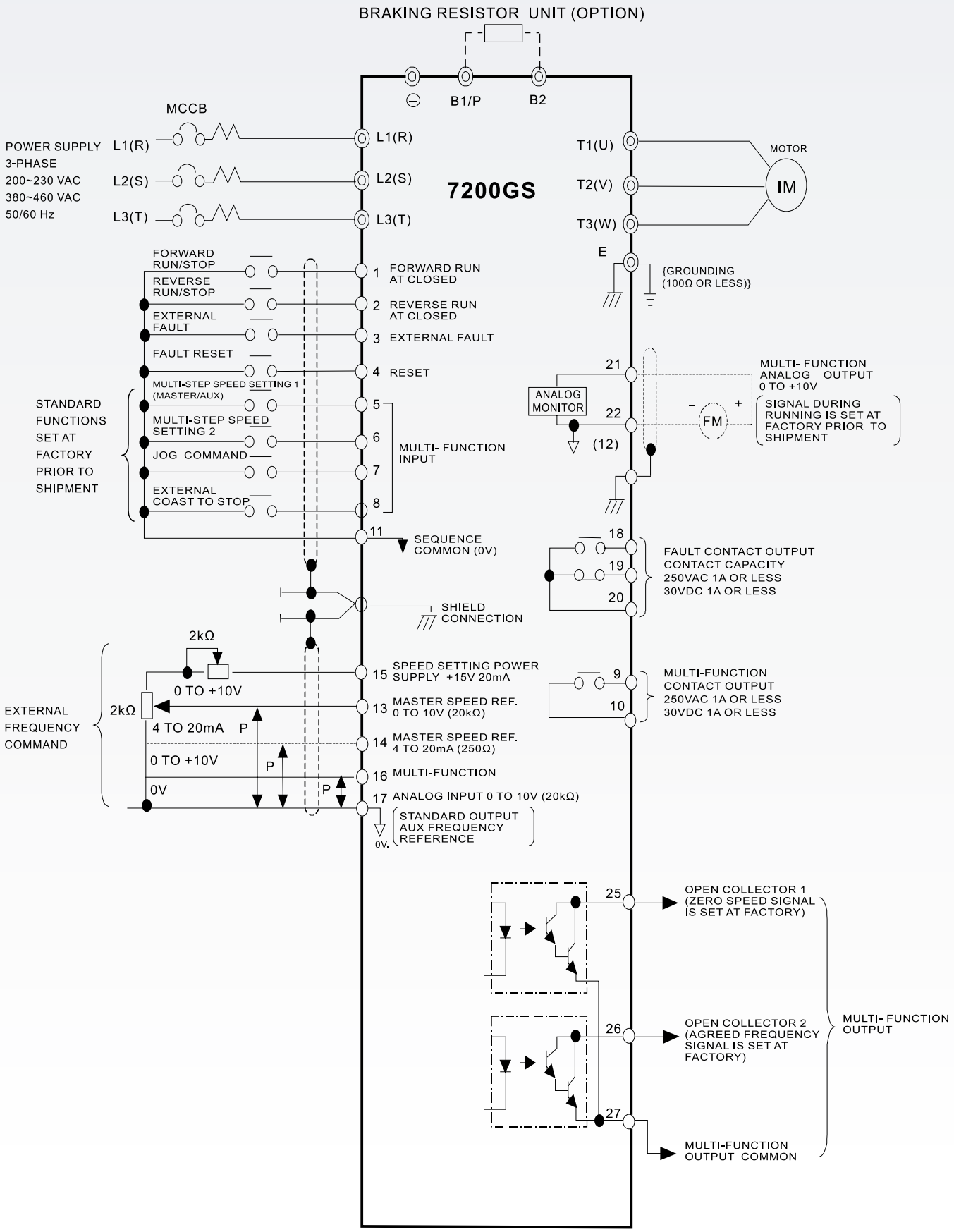

Specifications

230V Class

INVERTER (HP)		25	30	40	50	60	75	100
MAXIMUM APPLICABLE MOTOR OUTPUT HP (KW)*1		(18.5)	25 (22)	30 (30)	40 (37)	50 (45)	60 (55)	75 100 (75)
Output Characteristics	Inverter Capacity (KVA)	34	41	54	57	67	85	128
	Rated Output Current (A)	80	96	130	160	183	224	300
	Maximum Output Voltage	3-Phase, 200/208/220/230V (Proportional to Input Voltage)						
	Rated Output Frequency	Up to 400Hz						
Power Supply	Rated Input Voltage and Frequency	3-Phase, 200/208/220V, 50Hz 200/208/220/230V, 60Hz						
	Allowable Voltage Fluctuation	+10%~-15%						
	Allowable Frequency Fluctuation	±5%						

460V Class

INVERTER (HP)		25	30	40	50	60	75	100	125	150	175	215	250	300/350	400/450
MAXIMUM APPLICABLE MOTOR OUTPUT HP (KW)*1		25 (18.5)	30 (22)	40 (30)	50 (37)	60 (45)	75 (55)	100 (75)	125 (90)	150 (110)	175 (132)	215 (160)	250 (185)	300/350 (220)	400/450 (300)
Output Characteristics	Inverter Capacity (KVA)	34	41	54	68	82	110	138	180	195	230	260	290	385	513
	Rated Output Current (A)	40	48	64	80	96	128	165	192	224	270	300	340	450	600
	Maximum Output Voltage	3-Phase, 380/400/415/440/460V (Proportional to Input Voltage)													
	Rated Output Frequency	Up to 400Hz													
Power Supply	Rated Input Voltage and Frequency	3-Phase, 380/400/415/440/460V, 50/60Hz													
	Allowable Voltage Fluctuation	+10%~-15%													
	Allowable Frequency Fluctuation	±5%													

*1 Based on a 4 pole motor

Characteristics

Control Characteristics	Control Method	Sine Wave PWM Four Control Modes (switch by parameter) – V/F Control – V/F + PG Control – PID & Auto Energy Saving Control – Sensorless Vector Control (with Auto-Tuning)
	Starting Torque	V/F Control: 150% at 3Hz Sensorless Vector Control: 150% at 1Hz
	Speed Control Range	V/F Control 1:10 Sensorless Vector Control 1:60
	Speed Response	5Hz (Sensorless Vector)
	Speed Control Accuracy	V/F Control ± 1% (with Slip Compensation) V/F + PG Control: ± 0.03% Sensorless Vector Control: ± 0.5%
	Frequency Control Range	0.1 to 400HZ
	Frequency Setting Resolution	Digital Command: 0.1Hz (100Hz below); Analog Reference: 0.06Hz/60Hz
	Frequency Accuracy	Digital Command: ± 0.01% (-10 ~ 40˚C); Analog Command: ± 0.1% (25˚C ± 10˚C)
	Output Frequency Resolution	0.01Hz
	Frequency Setting Signal	0 ~ 10VDC (20K Ω), 4 ~ 20mA (250 Ω)
	Overload Capacity	150% Rated Output Current for 1 Minute
	Acceleration/Deceleration Time	0.1 to 6,000 seconds (Independent Acceleration/Deceleration time setting)
	Efficiency at Rated Frequency	0.95 above
	Braking Torque	Approximately 20% Inverter of 460V 25HP (18.5KW) has a built-in braking transistor
Protective Functions	Motor Overload Protection	Electric Thermal Overload Relay
	Instantaneous Overcurrent	Motor Coasts to Stop at Approximately 200% of Rated Output Current
	Overload	150% Rated Output Current for 1 Minute
	Overvoltage	Motor Coasts to Stop if the Main Circuit Voltage exceeds 410VDC for 230V class (820VDC for 460V class)
	Undervoltage	Motor Coasts to Stop if the Main Voltage Drops to 190VDC for 230V class (380VDC for 460V class)
	Momentary Power Loss	Immediately stops after power loss (at factory setting) of 15 milli-seconds or longer Continuous Operation During Power Loss Less than 2 seconds (standard)
	Fin Overheat	Thermostat
	Stall Prevention	Stall Prevention at Acceleration/Deceleration and Constant Speed Operation
	Ground Fault	Provided by Electronic Circuit
	Power Change Indication	Indication until Main Circuit Voltage Reaches 50V
Environmental Conditions	Location	Indoor (Protected from Corrosive Gases and Dust)
	Humidity	95% RH (Non-Condensing)
	Storage Temperature	-20 ~ +60˚C (for Short Periods During Shipping)
	Ambient Temperature	14 to 104˚F (-10 to +40˚C) for NEMA 1 type 14 to 113˚F (-10 to +45˚C) for Open Chassis type
	Altitude	1,000m or below
Communication Function		MODBUS, PROFIBUS (option)
EMC		Complies with requirments of ENG1800-3 with optional filter

Dimensions

VOLTAGE (V)	INVERTER CAPACITY (HP)	OPEN CHASSIS TYPE (IP00) inches						WEIGHT (LB)	ENCLOSED TYPE (NEMA 1) inches						WEIGHT (LB)	ACL/DCL	REFERENCE FIGURE
		W	H	D	W1	H1	d		W	H	D	W1	H1	d			
230V	25	11.16	20.67	12.09	8.66	19.88	M8	66	11.48	29.33	12.09	8.66	19.88	M8	74	DCL Built-in (Standard)	(b)
	30							66							74		
	40	18.07	31.10	12.78	12.60	29.92	M10	165	18.19	43.50	12.78	12.60	29.92	M10	179		
	50							168							181		
	60							168							188		
	75							174							195		
	100	23.58	39.37	15.02	18.11	37.80	M12	265	23.70	51.38	15.02	18.11	37.80	M12	287		
460V	25	10.43	14.17	8.86	9.65	13.39	M6	26	10.43	14.17	8.86	9.65	13.39	M6	27	External ACL (Optional)	(a)
	30	11.16	20.67	12.09	8.66	19.88	M8	79	11.48	29.33	12.09	8.66	19.88	M8	84	DCL Built-in (Standard)	(b)
	40							79							84		
	50	13.54	24.80	12.78	9.84	24.02	M8	104	13.86	37.20	12.78	9.84	24.02	M8	111		
	60							104							111		
	75							104							111		
	100							137							144		
	125	18.07	31.10	12.78	12.60	29.92	M10	176	18.19	43.50	12.78	12.60	29.92	M10	188		
	150							179							190		
	200	23.58	39.37	15.02	18.11	37.80	M12	291	23.70	51.38	15.02	18.11	37.80	M12	307		
	250							291							307		
	300/350	28.74	48.43	15.04	27.17	36.61	M12	375	28.74	52.36	15.04	27.17	36.61	M12	388	External ACL (optional)	(c)
	400/450							419							432		

Outline Dimensions

(a) 460V: 25 HP

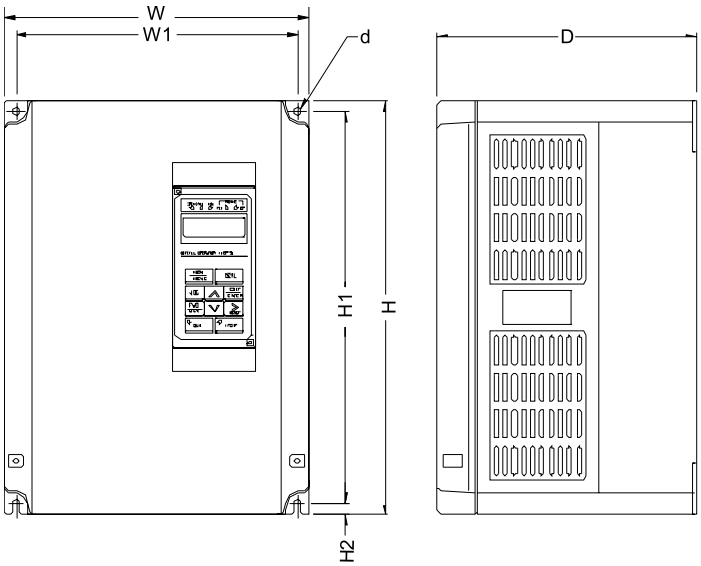

(NEMA1)

Outline Dimensions

(b) 230V: 25 HP - 100 HP
460V: 30 HP - 250 HP

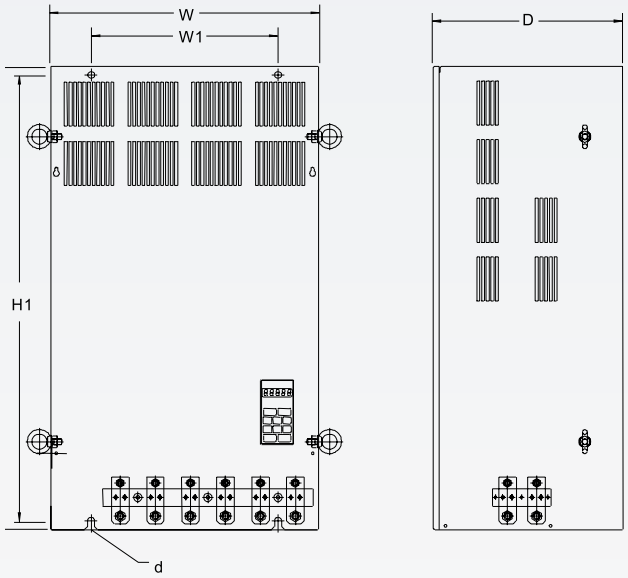

(Open Chassis Type-IP00)

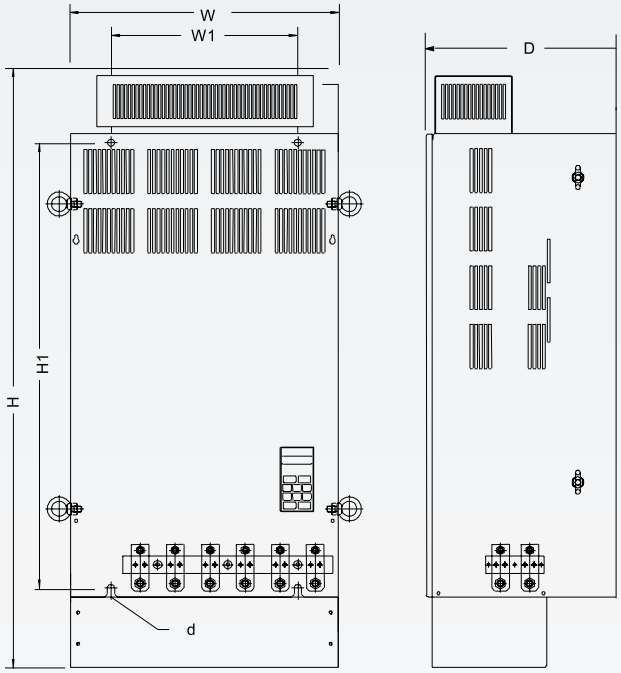

(Wall-mounted Type-NEMA1)

(c) 460V: 300 HP - 450 HP

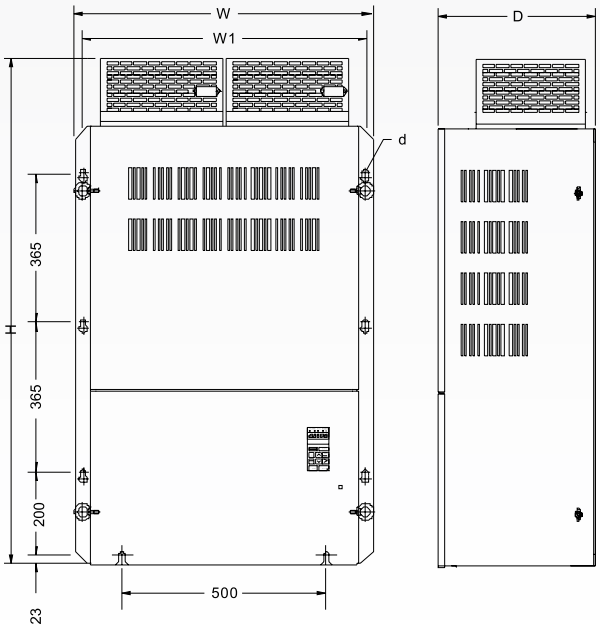

(Open Chassis Type-IP00)

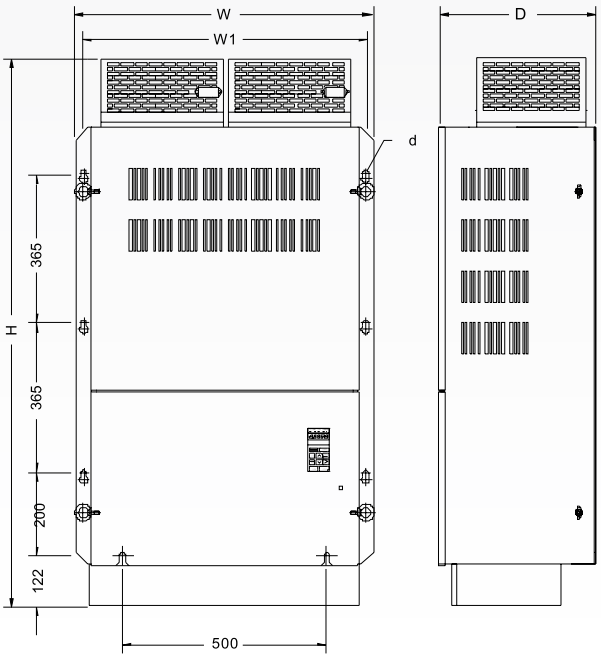

(Wall-mounted Type-NEMA1)

5100 N. IH-35
Round Rock, Texas 78681
1-800-279-4007

www.tecowestinghouse.com

D-7200GS 10-05